BURGESS-MANNING

MODEL WSDA - Discharge Water Separator/Silencer

Burgess-Manning Discharge Separator/Silencer For Water-Sealed Vacuum Blowers

Description:

Burgess-Manning centrifugal type water separator/silencers are designed to remove entrained liquid from air in a vacuum system while providing noise reduction.

Features:

- 99% efficient extraction of free liquid
- Up to 40 dB noise reduction
- Economically priced
- Long service life

Theory of Operation:

The Burgess-Manning patented design removes liquid and prevents noise instead of muffling it. Gas flow passes through a ported tube and snubbing chamber which attenuates the noise over a wide frequency range. Simultaneously, 99% of the free liquid is removed centrifugally in the separation section.

Specifications:

Extraction Efficiency:	99% of Free Liquid
Noise Reduction:	Up to 40 dB
Maximum Operating Pressure:	10 psig
Typical Sizes:	1” - 30’ Larger Sizes Available Upon Request
Standard End Connections:	NPT or 125# ANSI Flanged
Standard Material of Construction:	Carbon Steel Other Materials Available Upon Request
Finish:	Prime Coated Exterior

Burgess-Manning model WSDA Water Separator

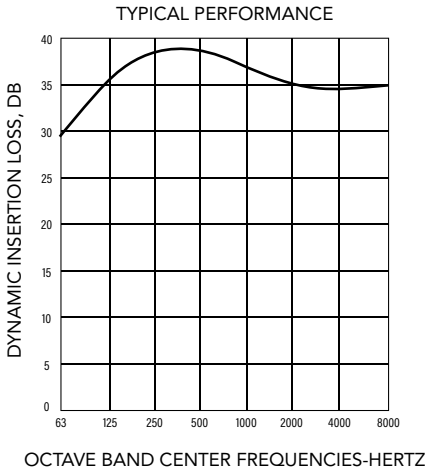

MODEL WSDA - Discharge Water Separator/Silencer

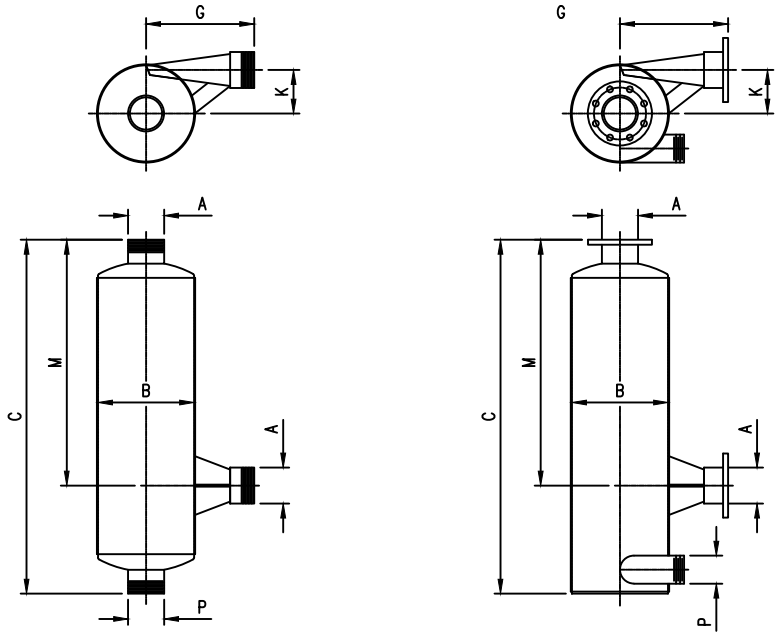

WSS
SIZES 1" THRU 3 1/2"

WSS
SIZES 4" AND LARGER

Catalog Number	Dimensions in Inches							Estimated Weight in lbs.
	A	B	C	G	K	M	P	
WSDA-1	1	4 1/2	20 3/4	6	2 1/16	15 1/2	1	15
WSDA-1.25	1 1/4	4 1/2	20 3/4	6	2 1/16	14 3/4	1	20
WSDA-1.5	1 1/2	6	25	7	2 3/4	19	1 1/2	30
WSDA-2	2	8	32 7/8	9	3 11/16	25	2	50
WSDA-2.5	2 1/2	10	35 1/2	10	4 5/8	26	2	70
WSDA-3	3	10	41	11	4 9/16	31	2 1/2	95
WSDA-3.5	4	12	44 5/8	12	5 1/2	33	2 1/2	135
WSDA-4	4	12	47	13 1/2	5 7/16	36 1/2	3	155
WSDA-5	5	16	59 1/2	14 1/2	7 5/16	47	3	265
WSDA-6	6	18	71 3/4	18	8 3/16	57	3	370
WSDA-8	8	22	90 1/4	21 1/2	9 15/16	71	3	590
WSDA-10	10	24	103 1/4	26	10 11/16	80	3	955
WSDA-12	12	30	128 1/2	31 1/2	13 7/16	101	4	1605
WSDA-14	14	36	141 1/4	36 1/2	16 1/4	109 1/4	4	2850
WSDA-16	16	42	154 1/4	41 1/2	18 7/8	118 1/4	4	3815

NOTES: - Flanges are drilled to match 125 lb. American Standard Flanges
- Larger units available upon request
- Specifications subject to change without notice

BURGESS-MANNING
BurgessManning@OneCeco.com
Locations:
Dallas, TX • Elma, NY • Nunspeet, Netherlands

CECO ENVIRONMENTAL
www.CECOenviro.com
Info@OneCeco.com